| ITEM NO. | PART NUMBER | DESCRIPTION | QTY. |
|---|---|---|---|
| 1 | Roof Conyers ASM | | 1 |
| 1.1 | Roof Sheet Metal 0.063in | Sheet Metal Roof (1/16)" | 2 |
| 1.2 | Roof Side Sup 6x0.25 | Roof Support 6x(1/4)" Beam | 2 |
| 1.3 | Roof Sup Beam 3x3x0.125 | Roof Support 3x(1/8)" Beam | 22 |
| 1.4 | Roof Side Sup 6x0.25 | Roof Support 6x(1/4)" Beam | 4 |
| 1.5 | Roof Rib 1.5x0.125 | Roof Ribbing 43.5" | 12 |
| 1.6 | Roof Rib 1.5x0.125 | Roof Ribbing 45" | 24 |
| 1.7 | Roof Lateral Sup 152in 76in | Lateral Support 152x(1/4") OUTER | 2 |
| 1.8 | Roof Lateral Sup 152in 76in | Lateral Support 76inx(1/4") INNER | 5 |
| 1.9 | Gussets Plates and Plugs Var 1 | (1/16)" PLATE | 4 |
| 1.10 | Gussets Plates and Plugs Var 1 | (1/2)" PLATE | 8 |
| 1.11 | Gussets Plates and Plugs Var 1 | (3/8)" PLATE | 8 |
| 1.12 | Gussets Plates and Plugs Var 1 | (3/8)" PLATE | 4 |
| 1.13 | Gussets Plates and Plugs Var 1 | (1/4)" PLATE | 4 |
| 1.14 | Gussets Plates and Plugs Var 1 | (1/4)" PLATE | 4 |
| 1.15 | Roof Concrete Base 6in | Footing: Concrete 5,000[psi] | 4 |
| 1.15.1 | Roof Concrete 24x48 6in Beam | 5000[psi] concrete 0.34[m3] : 12[ft3] | 1 |
| 1.15.2 | Roof Rebar ring 1 | (1/2)" - 304SS | 3 |
| 1.15.3 | Roof Rebar Vertical 1 | (1/2)" - 304SS | 1 |
| 1.15.4 | Roof Buried beam 6in | 304SS | 1 |
| 1.15.5 | Roof Mounting Plates 1 2 | (3/4)" - 304SS | 1 |
| 1.15.6 | Roof Mounting Plates 1 2 | (3/4)" - 304SS | 2 |
| 1.15.7 | Bolt ASM 2.5in 18-8 SS | 2.5"-13TPI - 2 WASHERS - 2 NUTS | 12 |
| 1.15.7.1 | 92198A722 | 18-8 Stainless Steel Hex Head Screw Made Outside The U.S. | 1 |
| 1.15.7.2 | 92141A033 | 18-8 Stainless Steel Washer | 2 |
| 1.15.7.3 | 91845A310 | 18-8 Stainless Steel Hex Nut | 2 |
| 2 | CrosBody 2per Decimated | | 1 |
| 2.1 | Cross 2per Decimated | CROSS FOR 2% DECIMATED MODEL W/SIGN | 1 |
| 2.2 | Body 2per Decimated | BODY, 2% DECIMATED GEOMETRY | 1 |
| 2.3 | CrossConcrete Base | | 1 |
| 2.3.1 | CrossConcrete base 5000psi | Concrete 5[ksi] 0.32[m3], 11.3[ft3] | 1 |
| 2.3.2 | CrossRebar ring 1 | 2024/6061 AL ROD OR REBAR 1/2" | 3 |
| 2.3.3 | CrossRebar Vertical 1 | 2024/6061 AL ROD OR REBAR 1/2" | 1 |
| 2.3.4 | CrossBuried beam 1 | 8"x0.5" AL 6061-T6 | 1 |
| 2.3.5 | CrossMounting Plates 1 | 3/4" PLATE 6061-T6 | 1 |
| 2.3.6 | CrossMounting Plates 1 | 3/4" PLATE 6061-T6 | 1 |
| 2.3.7 | CrossMounting Plates 1 | 3/4" PLATE 6061-T6 | 1 |
| 2.3.8 | CrossBolt ASM 3in 6061AL | 2.5" MIN AL 0.5-13 | 12 |
| 2.3.8.1 | fastenal_0176235 | 3"x(1/2)"-13 | 1 |
| 2.3.8.2 | 93286A049 | Aluminum Washer | 2 |
| 2.3.8.3 | 90670A033 | 6061 Aluminum Hex Nut | 2 |
| 2.3.8.4 | Shim 0.75x0.875x0.875 AL | 6061 AL | 1 |
| 3 | Stone Altar | Altar is on a small slope | 1 |
| 4 | Mary 10a 7per from stl_21 | The Miraculous Medal | 1 |

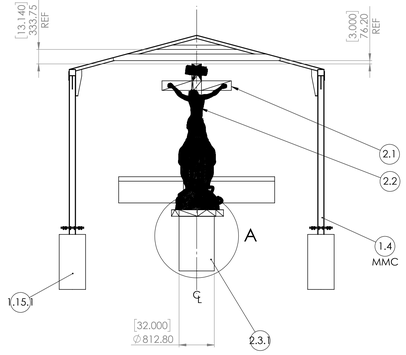


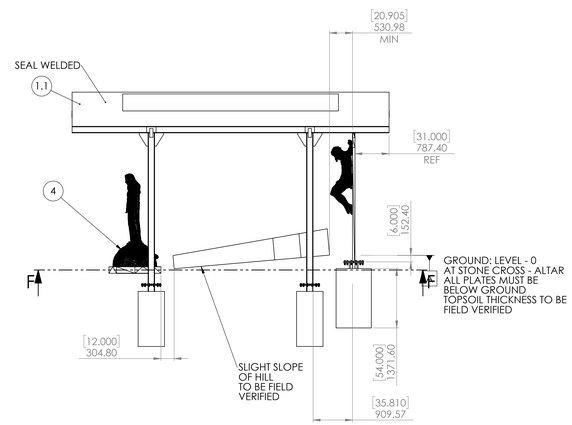


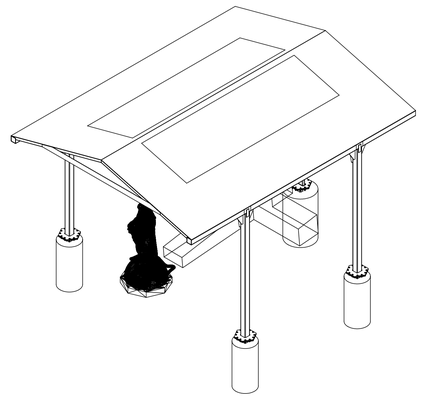

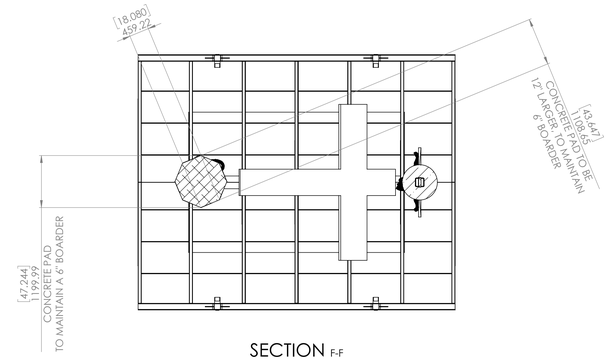


SECTION F-F

SPECIFICATIONS)
(1) ALL WORK SHALL BE COMPLETED/APPLICABLE TO 2024 IBC AND OSHA
(2) ALL WORK SHALL BE COMPLETED/APPLICABLE TO ALL OTHER APPLICABLE CODES
(3) ALL WORK SHALL BE COMPLETED/APPLICABLE TO ALL LOCAL CODES
(4) ALL PERMITS SHALL BE THE RESPONSIBILITY OF THE CONTRACTOR/S
(5) ALL SITE/FIELD MEASURMENTS SHALL BE FIELD VERIFIED PRIOR TO ON-SITE CONSTRUCTION
(6) CONTRACTOR/S SHALL BE RESPONSIBLE FOR MEASURMENT/PLACEMENT
(7) CONTACTOR/S SHALL BE RESPONSIBLE FOR VERIFICATION OF STRUCTURAL STABILITY/PLACEMENT ON ALL SURFACES/SLOPES
  (1) VERTICAL MEMBERS MUST NOT SLANT
  (2) HORIZONTAL MEMBERS MUST NOT LEAN
(8) CONTRACTOR IS RESPONSIBLE FOR FIT/FINISH
  (1) NO DISJOINTED PARTS OR ASSEMBLIES
  (2) SURFACE ANOMOLIES/DISTORTIONS/DEFECTS
(9) FOR UNFORSEEN/UNEXPECTED SOIL DETRIMATES CONSULT SUPERVISING LEAD AND/OR ENGINEER
(10) UNREGISTERED/UNANTICIPATED EVENTS, STRUCTURAL OR OTHERWISE CONSULT SUPERVISOR
(11) FOUNDATION/S MOUNTING PLATES/FASTENERS MUST BE 2[IN] BELOW THE TOPSOIL/GRAVEL
(12) ROOF VERTICAL SUPPORTING MEMBERS ARE NOT TO EXCEED 12[FT] (3.66[M])

MATERIAL)
(13) ROOF MATERIAL IS 304SS, 18-8SS FOR FASTENERS IS ACCEPTABLE
(14) MATING SURFACES SHALL NOT CONTACT DISIMMILAR METALS
(15) ALUMINUM RODS MAY BE USED IN PLACE OF REBAR, W/R ALUMINUM STRUCTURE/S
(16) MATERIAL OF CAST CROSS & BODY (CORPSE) WAS DESIGNED W/R A383.0-F
(17) CAST MATERIAL WITH Sy (YIELD STRENGTH) OF 22[KSI] OR GREATER IS ACCEPTABLE
(18) ALUMINUM STRUCTURAL STEEL 6061-T6 T651, Sy OF 37[KSI] OR GREATER IS ACCEPTABLE
(19) ROOF: ALL VERTICAL SUPPORTS ARE TO BE LESS THAN 12[FT] (3.66[M]) FROM MOUTING PLATE
(20) CONCRETE:
  (1) FOOTINGS MAY BE SQUARE
  (2) CONCRETE COMPRESSION STRENGTH 3,000[PSI]

SURFACE FINISH)
(21) SURFACE FINISH AS DEFINED BY ANSI B46.1
(22) NO DEFECTS, DEFORMATIONS OR SCRATCHES
(23) VISIBLE PARTS RECIEVE TEXTURE
  (1) VISIBLE SURFACE FINISH ROUGHNESS RA 120[μIN] (3[μM])
  (2) VISIBLE SURFACE FINISH ROUGHNESS RMS 132[μIN] (3.4[μM])
  (3) VISIBLE SURFACE FINISH FOR ROOF/STRUCTURE NASF-M12-P OR NASF-C22-P
  (4) MECHANICAL OR CHEMICAL NON-DIRECTIONAL PER RA & RMS
(24) NON-VISIBLE PARTS, CCAS MANUFACTURED, M10
(25) NO TEXTURE ON CAST PARTS OR ASSEMBLIES, CROSS OF THE CRUCIFIXION
(26) NO TEXTURE ON CAST PARTS OR ASSEMBLIES, MIRACULOUS MEDAL

MATES/WELDS)
(27) WELD MATERIAL IS TO BE COMPATIBLE WITH MATERIALS
(28) Sy (YIELD STRENGTH) OF THE WELD MATERIAL IS TO BE GREATHER THAN THE MATING MATERIALS
(29) WELDS ARE TO BE CONVEX, MINIMUM OF 17% LARGER THAN THICKEST PART/PLATE
(30) ROOF-PANELS ARE SEAL WELDED BOTH SIDES, ITEM 1.1

MISC)
(31) STONE ALTAR IS TO BE REPAIRED
(32) STONE ALTAR IS TO BE A MINIMUM OF 6[IN] (155[MM]), IN THE HORIZONTAL, FROM THE CONCRETE FOUNDATION OF THE CROSS
(33) ALL BOLTS ARE TO BE DOUBLE-NUTTED: 1ST NUT (TO PART) AT 10[LBF-FT], 2ND NUT (TO NUT) AT 15 20[LBF-FT], NO SPACER BETWEEN THE NUTS

STATS/DATA)
(34) DATA IS MASTER
(35) BACKGROUND, DETAILS AND CALCULATIONS ARE LOCATED IN "Architectural Modeling 3 Crosses Rev 20---" (LATEST DATE- - WORD/PDF DOCUMENT)
(36) WEIGHT OF THE CROSS OF THE CRUCIFIXION IS 860[LBF] (390[KG] SOLID
(37) VOLUME OF THE CROSS OF THE CRUCIFIXION IS 5.2[FT3] (0.15[M3]) SOLID
(38) WEIGHT OF MOTHER MARY IS LESS THAN 3,600 [LBF] (1,650[KG])
(39) VOLUME OF MOTHER MARY IS LESS THAN 22[FT3] (0.63[M3])
(40) CAST-PARTS MAY CONTAIN CAVITIES
  (1) THE HEAD/NECK/LEGS ARE TO REMAIN SOLID
  (2) THE GLOBE MAY MAINTAIN A 3.5[IN] (90[MM]) SHELL
  (3) MOTHER MARY & CORPSE MUST MAINTAIN A MINIMUM 2.5[IN] (64[MM]) SHELL

(41) CAST MODELS OF THE CROSS OF THE CRUCIFIXION ARE LOCATED IN)
  (1) "Cross Body ASM 1 Rj6.7z"
  (2) "Cross Body ASM 1 Part 1 aldprt.zip"
  (3) "Cross Body ASM 1 PLY.zip"
  (4) "Cross Body ASM 1.zip" (SOLIDWORKS INDIVIDUAL SEGMENTS
  (5) "Full ASMCnBmodel 20.7z" (BLENDER GRAPHICS)
  (6) "Full ASMCnBmodel 20.zip" (BLENDER GRAPHICS, STL AND OTHER)

(42) CAST MODELS OF THE MOTHER MARY OR THE MIRACULOUS MEDAL STATUES ARE LOCATED IN
  (1) "Mary 10a 7per from stl_21.zip"
  (2) "Mary 11 files.zip" : FOR DETAILED MODEL USE "Mary 11 100per Detail"
(43) THE MIRACULOUS MEDAL STATUE IS ON A 6[IN] REINFORCED CONCRETE PAD
  (1) (1/2) SS REBAR 12[IN] SEPARATION
  (2) 3,000[PSI] CONCRETE
(44) PLAQUES SHALL BE PLACED ON THE PATH TO AND AROUND THE GLORIOUS CROSS
  (1) PLAQUE #1:
    (1) LINE #1: "COMPELLED BY HIS LIMITLESS LOVE"
    (2) LINE #2: "HE CHOSE TO SUFFER, SO THAT WE MIGHT LIVE"
    (3) LINE #3: - BLANK -
    (4) LINE #4: "HE WOULD DO NOTHING LESS"
    (5) LINE #5: "BOUNDLESS IS HIS LOVE"
  (2) PLAQUE #2:
    (1) LINE #1: "THE DIFFICULT PATH HE CHOSE"
    (2) LINE #2: "SO INFINTE HIS DEVOTION"
    (3) LINE #3: - BLANK -
    (4) LINE #4: "HE WELCOMES THE AGONY"
    (5) LINE #5: "OUT OF ENDLESS LOVE"
    (6) LINE #6: "SOLEY TO GIVE US LIFE"
  (3) PLAQUE #3:
    (1) LINE #1: "THE CREATION OF A SOUL"
    (2) LINE #2: "FROM THE STUFF OF RIGHTEOUSNESS"
    (3) LINE #3: "VIRTUE BORN FROM BOUNDLESS LOVE"
    (4) LINE #3: - BLANK -
    (5) LINE #3: "CREATION AT CONCEPTION OF A PURE SPIRIT"
  (4) EACH IN AT LEAST 7 LANGUAGES

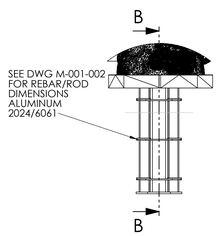


DETAIL A
SCALE 1 : 25

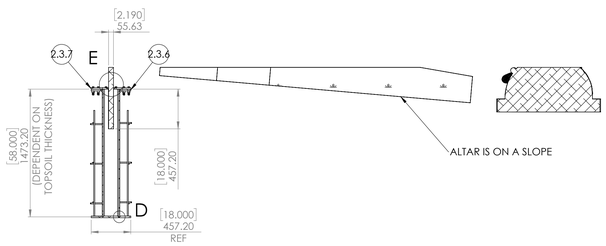


SECTION B-B
SCALE 1 : 25

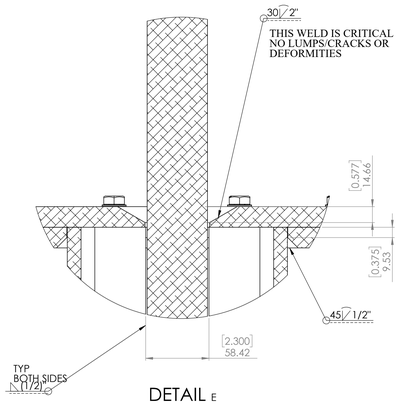


DETAIL E
SCALE 1 : 2

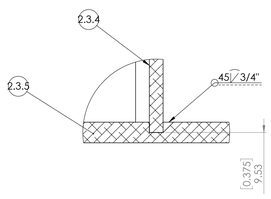


DETAIL D
SCALE 1 : 2

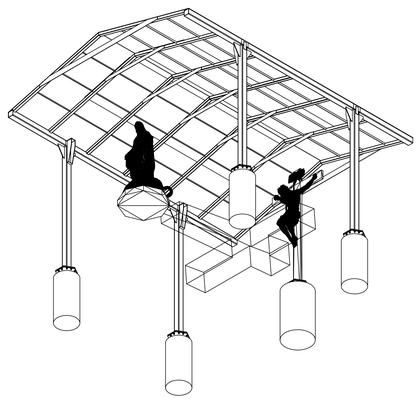

GEORGIA REGISTERED No. PE052322 PROFESSIONAL ENGINEER DANIEL WIDHALM

25 Jun 2026

UNLESS OTHERWISE SPECIFIED:
DIMENSIONS: [MM] - [IN]
TOLERANCES: (+/-) [.XX]

LOCATION: 2900 HWY 138 NE, CONYERS GA, 30013-1110 @ THE ROCK HILL
M1: ARCHITECTURAL, CLASS 1
M1: MECHANICAL, CLASS 1
S1: STRUCTURAL, CLASS 1
C1: CIVIL, CLASS 1

DEBURR AND BREAK SHARP EDGES

DO NOT SCALE DRAWING | REVISION

| | NAME | SIGNATURE | DATE |
|---|---|---|---|
| DRAWN | | | |
| CHK'D | | | |
| APPV'D | | | |
| MFG | | | |
| Q.A | | | |

MATERIAL: SEE NOTES

WEIGHT:

CREO DESIGNS

TITLE: HOLY HILL ASM
CROSS W/CORPSE
MIRACULOUS MEDAL
ROOF

DWG NO. M1-S1-C1-001-0000 | A0

SCALE:1:50 | SHEET 1 OF 3